STRATASYS FDM TPU 92A BEST PRACTICES

November 2018

stratasys

STRATASYS CONFIDENTIAL & PROPRIETARY INFORMATION

stratasys

IMPORTANT CONSIDERATIONS ABOUT FDM TPU 92A MATERIAL

This document is intended to point out the key differentiations and how to get the best results in printing parts with FDM® TPU 92A material

Applicable Documents:

- F123 User Guide
  - Please refer to the Troubleshooting section of the F123 User guide for possible issues related to system operation
    - Available on the Stratasys.com website:
      - http://articles.stratasys.com/user-guides/fdm-3d-printers/f123-series-user-guide
- F123 Series TPU 92A Quick Start Guide
  - Included in the FDM TPU 92A Upgrade Kit

STRATASYS CONFIDENTIAL & PROPRIETARY INFORMATION

GENERAL INFORMATION

STRATASYS CONFIDENTIAL & PROPRIETARY INFORMATION

ELASTOMER EXTRUSION KIT

Contents:

- FDM TPU 92A extrusion head - Qty 1
- FDM TPU 92A filament spool, black - Qty 1
- Brochure with installation instructions - Qty 1
- Modified Upper Y Block - Qty 2

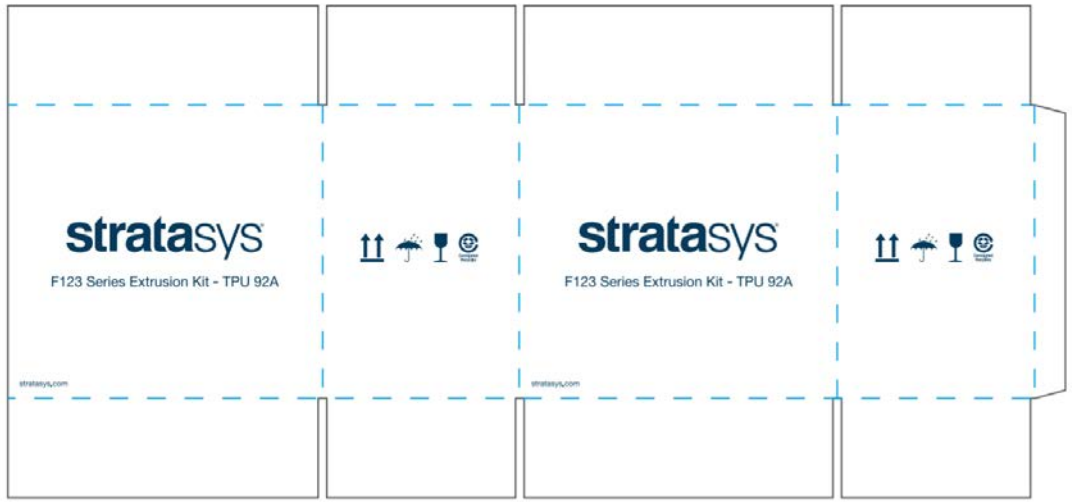

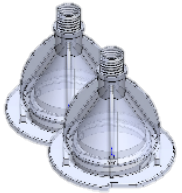

The kit can be installed by customers

TPU FILAMENT SPOOLS

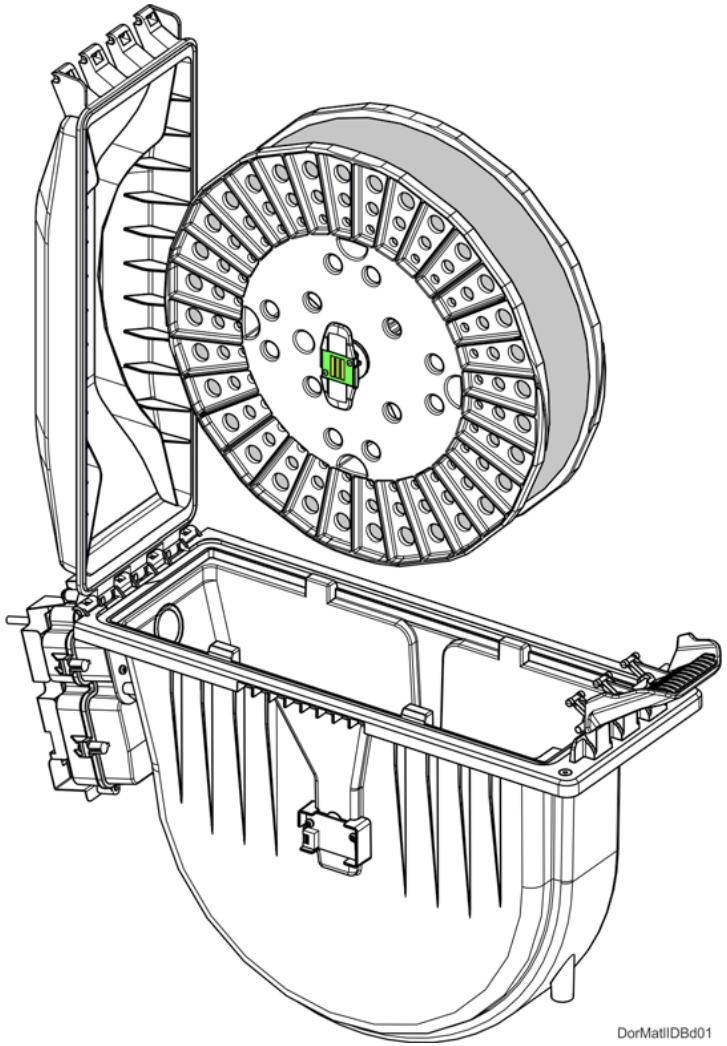

Spools:

Same spool consumable as F123 platform

Filament tail clips to spool OD

- Make sure to remove orange tape before loading

System Behavior:

- Load is slower for both model and support: approx. 60 vs. 10 seconds.
- Auto Change/Unload behavior
  - The printer isn’t intended to swallow the tail of the TPU material (meaning the head can’t push the material back through the filament detect switch)
  - Because the tail isn't swallowed, material will be left on the spool (approximately 20-150 feet will be left on the spool after it is marked empty. This number may vary based on machine and part geometry and is not counted as part of the 60 ci spool volume.

TPU MATERIAL HANDLING

- **Proper storage of materials is critical**.

- When removing TPU spools from the system, place the material spool in the Mylar bag immediately.
- For extended non-use periods greater than 48 hours, unload the material from the head and wind back onto the spool. Store in the material bay.
- (Environments with high humidity should unload the material after 36 hours)

- Note: If the machine has been idle with TPU material loaded for more than 48 hours, unload the filament and cut off 6 ft. (1.8 m) of the filament end and reload into the printer

STRATASYS CONFIDENTIAL & PROPRIETARY INFORMATION

PART ACCURACY

- Parts are produced within an accuracy of: +/- .254 mm (.010 in), or +/- .003 mm/mm (.003 in/in), whichever is greater
  - Accuracy is geometry-dependent. Achievable accuracy specification derived from statistical data at 95% dimensional yield.
  - Z part accuracy includes an additional tolerance of -0.000/+slice height.
- Putting printed parts into a support removal tank may cause swelling of up to 0.5%, which can result in the part being out of the accuracy tolerance initially.
  - Depending on part size and geometry it may take up to 72 hours for a part to shrink back to pre-tanked size.
- Due to the nature of the elastomer material, the visual quality of parts, particularly fine feature details, may not be as high as it is for rigid materials such as ABS or ASA on the F123 platform

STRATASYS CONFIDENTIAL & PROPRIETARY INFORMATION

BUILD TRAY HANDLING

For all materials it's important to avoid contamination during handling of the build trays

Placed thumb on clean, new substrate consistent with normal handling conditions. Firm pressure, some movement.

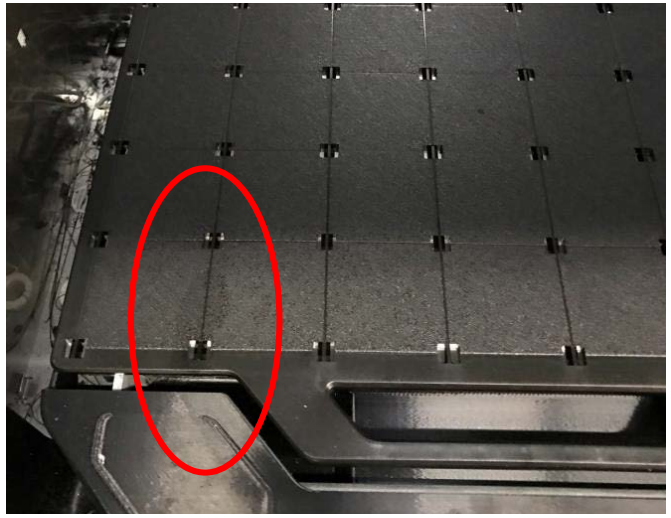

Oil from hand remains on build substrate

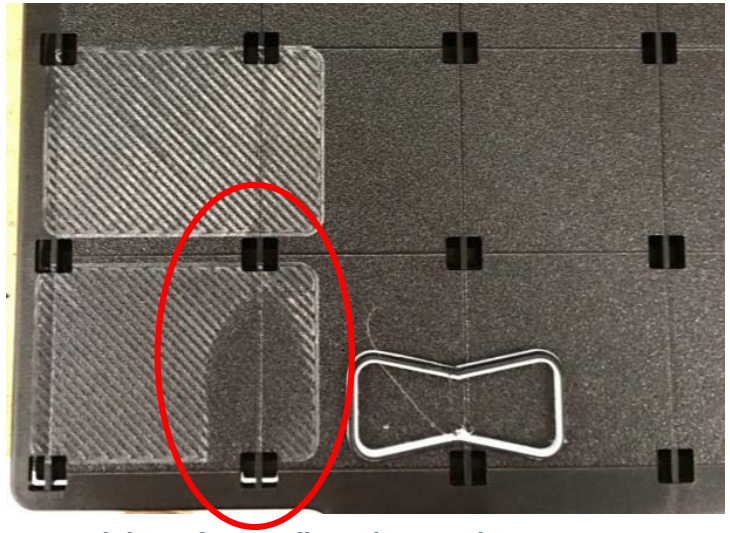

Residue from first layer is not present where oils are on substrate (indication of low adhesion). Normal handling typically leads to a build up of oil near edges and corners of substrate. This will lead to low adhesion for parts built in those areas.

HARDWARE

STRATASYS CONFIDENTIAL & PROPRIETARY INFORMATION

TPU MODIFIED HEAD DESIGN

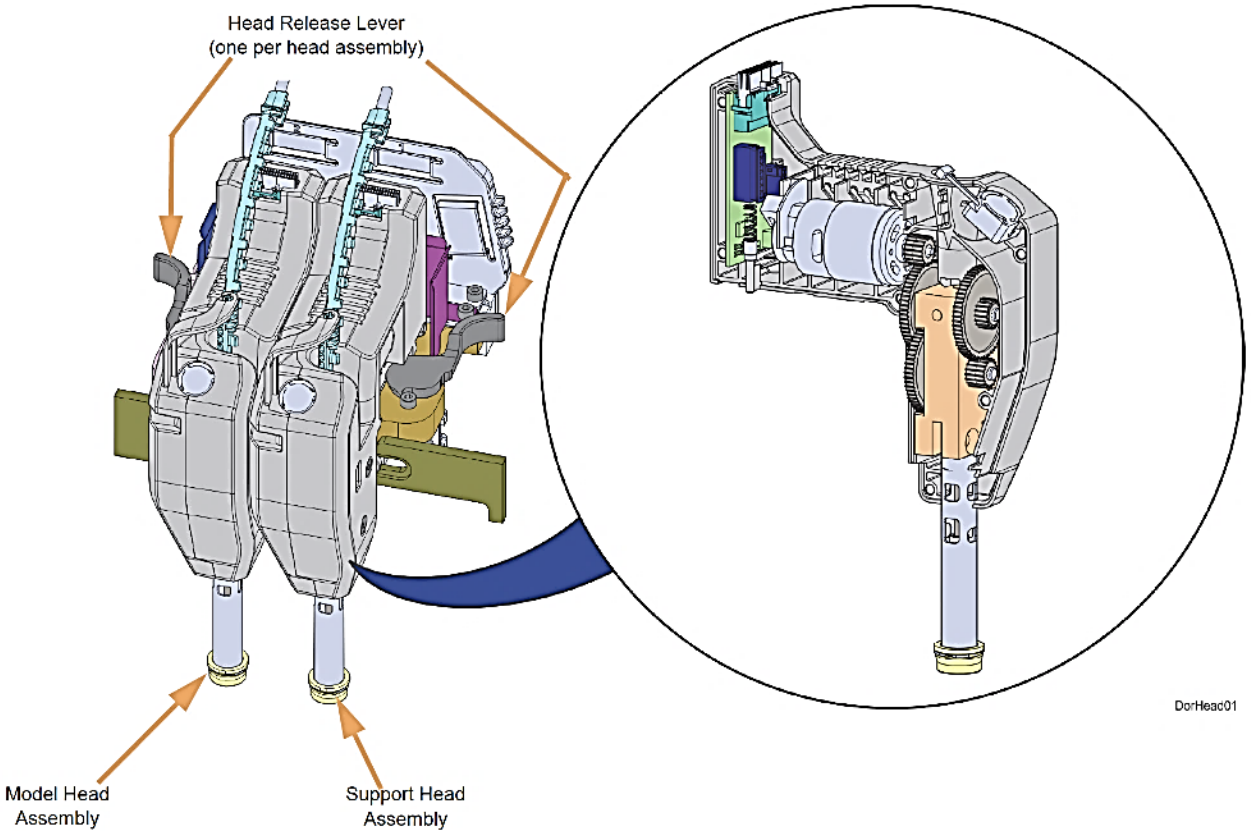

- Head Color: Blue
- Layer height: 0.010”
- T14 tip
- Consumable low mass head design
- Optimized for elastomeric material (not compatible with rigid materials)
  - Increased pinch on the filament
  - Quad Drive
- Head life:
  - 700 hrs. – Notification to order a new head.
  - 800 hrs. – Notification to replace head. Will be able to continue to print if print quality is desirable. (Standard head: 1500hrs)
  - Warranty – 90 days from install date.
- Throughput: 50% slower than ABS

STRATASYS CONFIDENTIAL & PROPRIETARY INFORMATION

MODIFIED UPPER Y-BLOCK

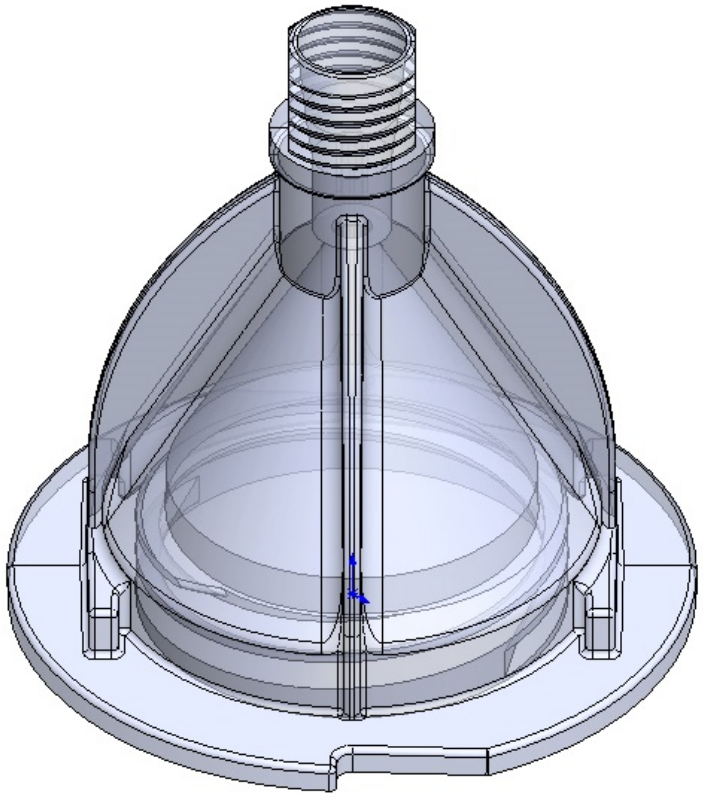

- Same part as previously used but with a media blasted interior
- Reason for replacement: fixes loading issues
  - Only the upper half of each Y-block needs to be replaced

STRATASYS CONFIDENTIAL & PROPRIETARY INFORMATION

TPU 92A TIP OFFSET CALIBRATION CHANGES

1. Perform Auto tip offset calibration
2. Perform Manual tip offset calibration on X&Y only.
   - TPU 92A adheres extremely well to QSR.
   - The automatic Z tip calibration is sufficient and manual Z calibration is not necessary.

STRATASYS CONFIDENTIAL & PROPRIETARY INFORMATION

PART QUALITY

Ripples or waves in parts:

- If you experience any waves or ripples in parts as shown on the right, please verify the following:
  - Tips and tip wipes are clean of any material debris.
    - Clean tips/tip wipes if any debris is present
  - Tip Wipes are adjusted to correct height
  - Try reorienting part for better results

STRATASYS CONFIDENTIAL & PROPRIETARY INFORMATION

SUPPORT REMOVAL TANK

Always tank the parts since manual support removal is likely to damage the part

Tank temperature: 70C

Note:

- An ultrasonic tank is most efficient (faster) for geometries with trapped cavities such as tubes
- The SCA 1200HT and the SCA 3600, which are typically used with the F123 platform, use circulation and are not ultrasonic

SCA 3600 Support Removal Tank

STRATASYS CONFIDENTIAL & PROPRIETARY INFORMATION

GRABCAD PRINT SOFTWARE

STRATASYS CONFIDENTIAL & PROPRIETARY INFORMATION

PART ORIENTATION

“Orient for stability”

- Normally, parts are oriented for function, aesthetics, speed, etc. with the expectation that parts will build successfully.
- With the FDM TPU 92A material, orienting for build success is the primary consideration. Then factors such as design intent and aesthetics can be considered.

STRATASYS CONFIDENTIAL & PROPRIETARY INFORMATION

PART ORIENTATION

- Try to minimize the Z extent
- Watch for vertical areas that can be unstable
- Insight users can further stabilize by increasing the self supporting angle (default is 55 degrees), switch to a different support style, and/or use stabilize walls

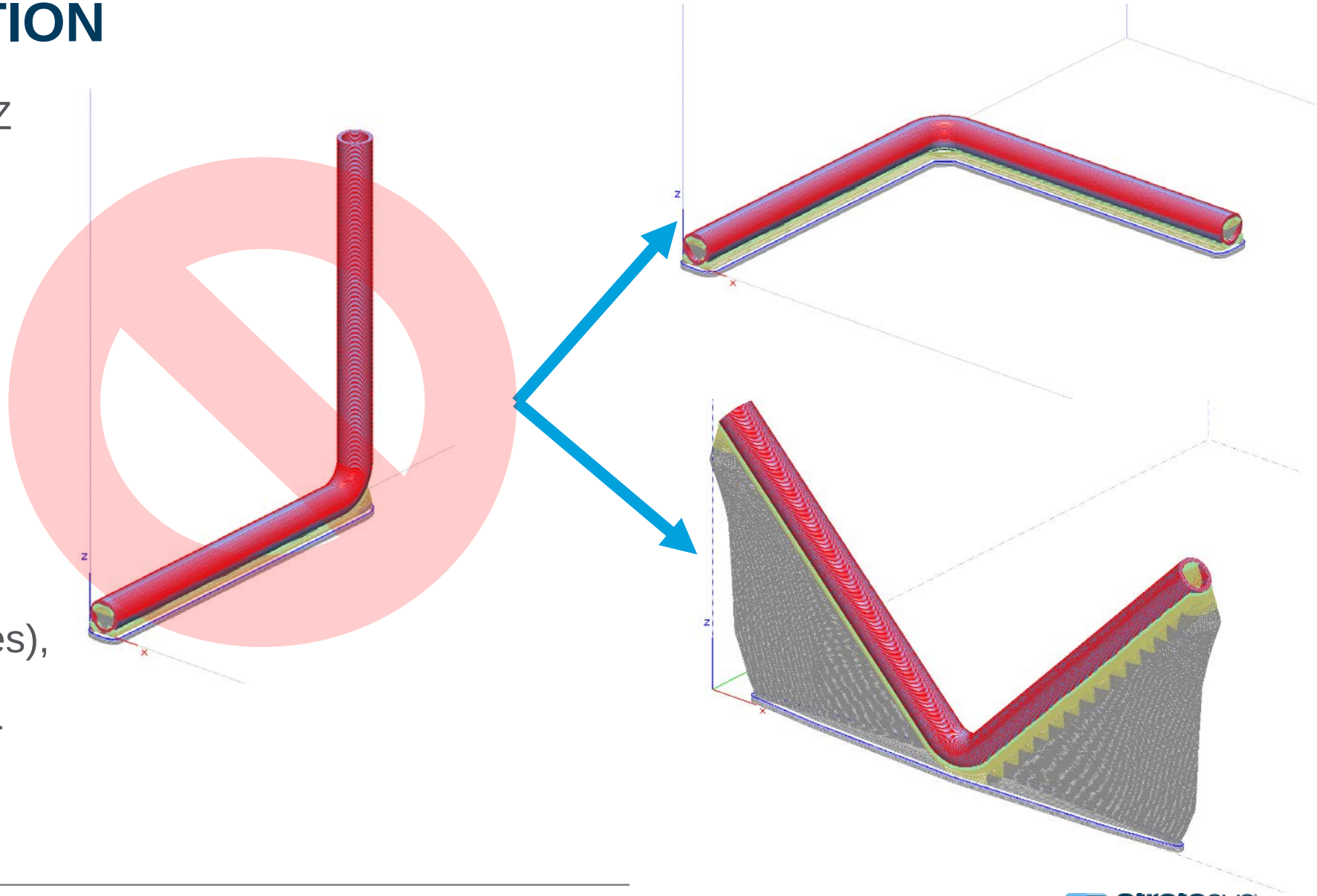

STRATASYS CONFIDENTIAL & PROPRIETARY INFORMATION

PROCESSING WITH INSIGHT

STRATASYS CONFIDENTIAL & PROPRIETARY INFORMATION

MODELER SETUP

Part interior style: High Density

Interior of High Density elastomer parts are 80% dense. We recommend against increasing this, as it may cause overfill and head jams.

Visible surface style: Enhanced

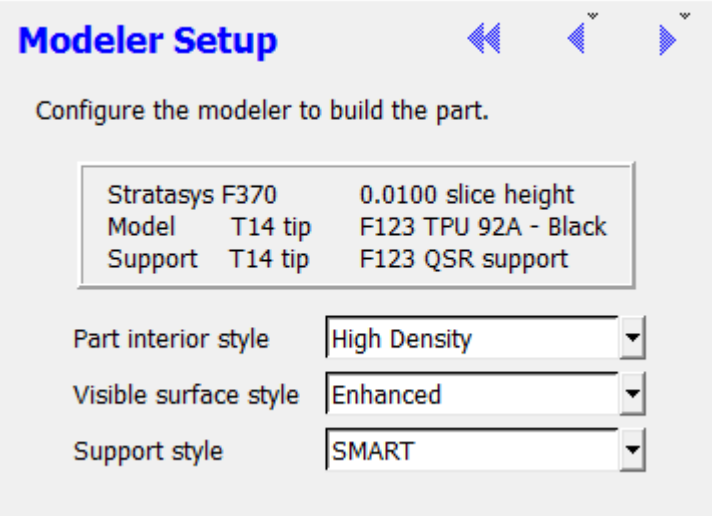

Note:

Solid, Sparse low density, and Sparse high density are not available

STRATASYS CONFIDENTIAL & PROPRIETARY INFORMATION

SUPPORT SETUP

Support style: Smart
Sparse and Surround are optional

Self supporting angle: 55.0000

Things to note:

- Support interface layers will leave a matte surface
- Using Surround support can leave lines on the part
- Don't use model as support

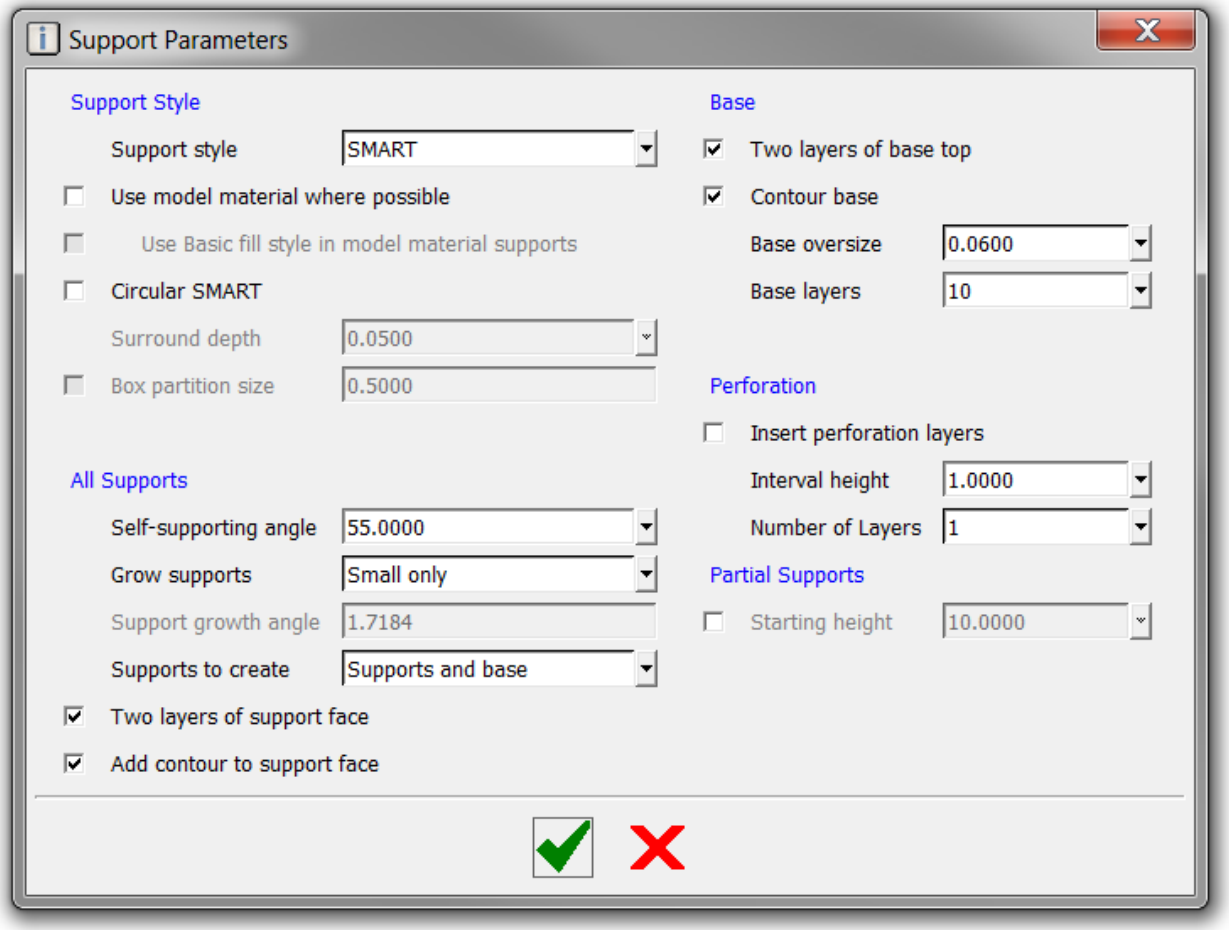

STRATASYS CONFIDENTIAL & PROPRIETARY INFORMATION

TOOLPATH SETUP

Part fill style: Multiple contours

Visible surface style: Enhanced

Link contours: Checked

Minimize transition moves: Checked

Things to note:

- The number of contours can be increased
- Don’t use variable width remnant fill
- Multiple contours helps with: sealing, seam quality (better/closed), consider two thin contours vs one larger contour.

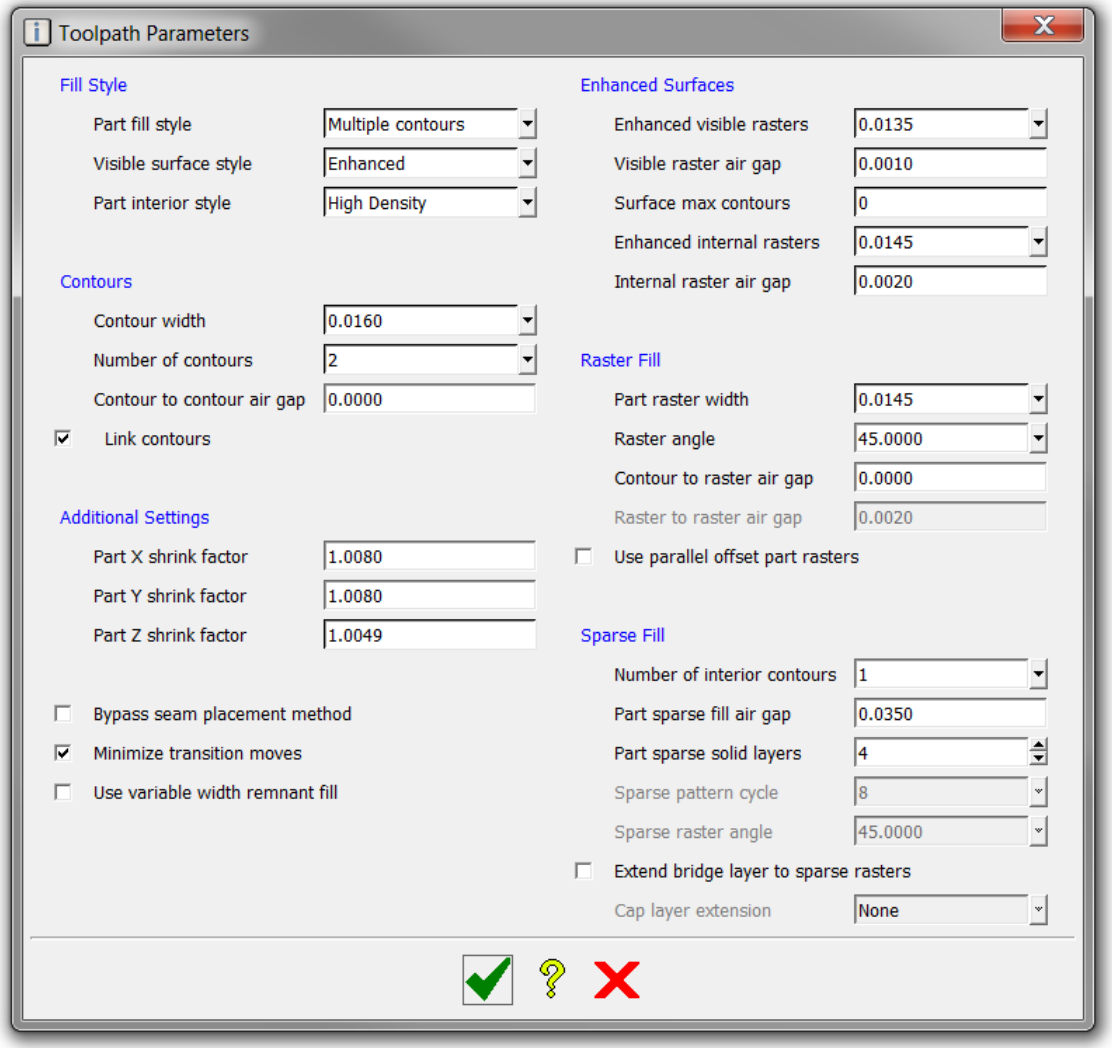

STRATASYS CONFIDENTIAL & PROPRIETARY INFORMATION

PART STABILIZATION (INSIGHT)

By default, stabilize walls are built with model material.

Generally, this is fine for stabilization up to ~5”.

For better stabilization, use a custom group to build the stabilize wall out of support material.

The template shown is a modified version of PartStabilizer

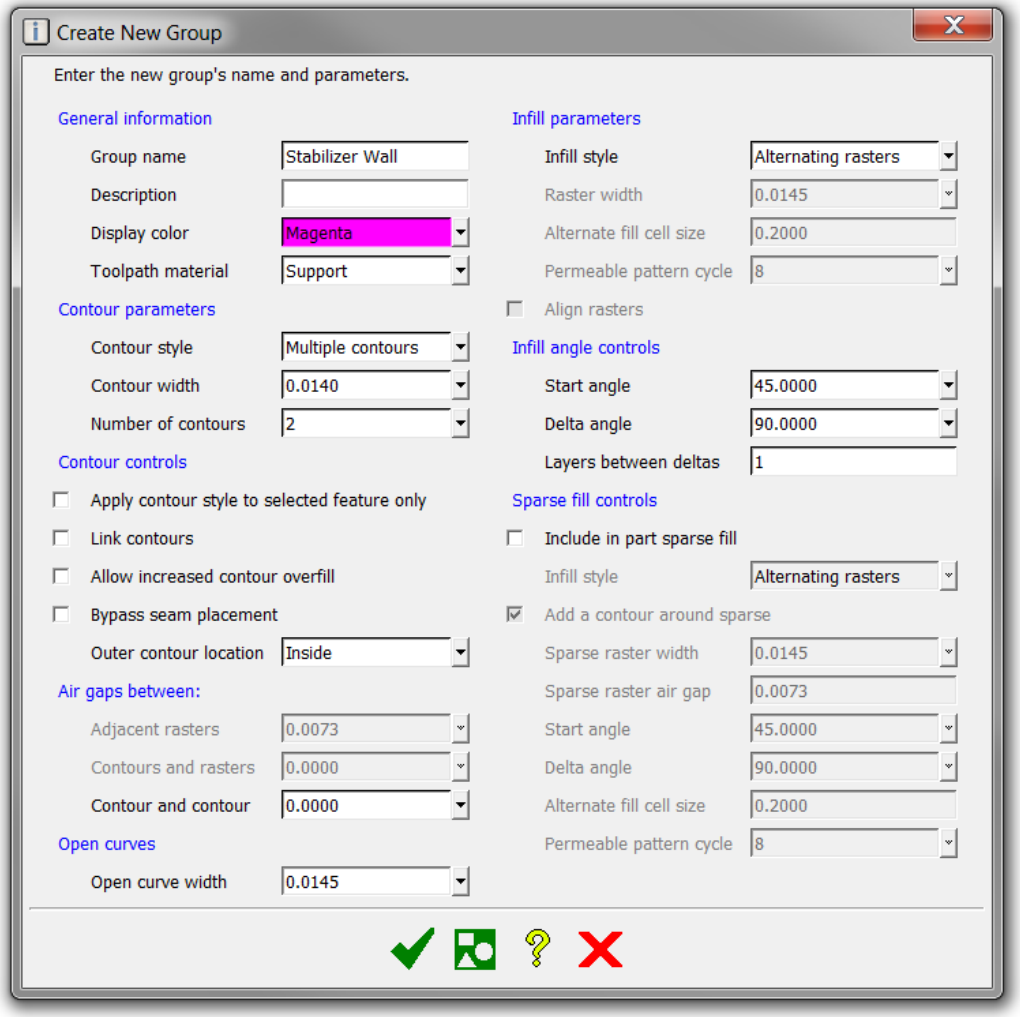

STRATASYS CONFIDENTIAL & PROPRIETARY INFORMATION

PART PACKING

Every print requires a full height purge part.

The use of a purge part enables:

- Faster head swaps
- Better control of purge material (conditions the liquefier) which ensures part quality.

Best Practices:

- Place the purge part close to the first part in the pack or next to the tallest part.

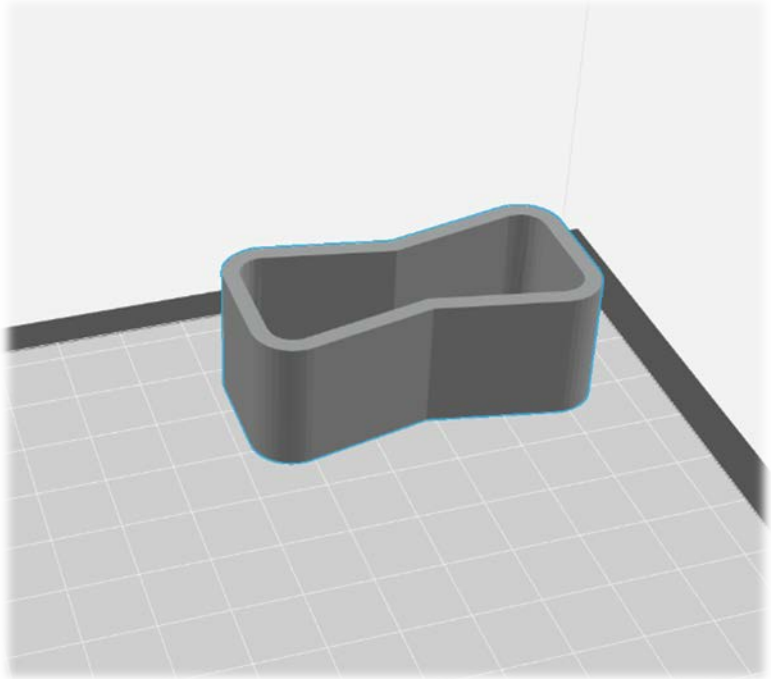

STRATASYS CONFIDENTIAL & PROPRIETARY INFORMATION